HIGH-RESOLUTION NEAR-INFRARED SPECTROSCOPY OF DEUTERATED MOLECULAR IONS

Haiming Wang, Christopher P. Morong, and Takeshi Oka
Department of Chemistry, Department of Astronomy & Astrophysics, and the Enrico Fermi Institute, University of Chicago, Chicago, IL 60637

INTRODUCTION

As a subject of study in astrochemistry, molecular ions play important roles in the formation of stars and planetary systems. Operating at the key points of chain reactions, they drive ion-neutral reactions efficiently in the low-temperature (~30 K) and low-density (~10^4 cm^{-3}) environment. The products of these reactions not only serve as the coolants that balance the gravitational collapse, but also provide crucial information about the physical and chemical conditions in these star forming regions. A current area of interest in astrochemistry is deuterium ion chemistry, due to the observations of highly deuterated molecules in prestellar cores and protostars in recent years. The widely accepted interpretation of this phenomenon as due to extraordinarily high deuterium fractionation of H_3^+ to H_2D^+, HD_2^+ and D_3^+ (1) implies that deuterated variants of other fundamental molecular ions also play pivotal roles in the deuterium fractionation. Aiming at providing approximate rotational constants for radio astronomers to detect these deuterated species in space, we have launched a project to study the laboratory spectra of the deuterated molecular ions. CH_2^+ has been chosen as our first target ion because it is the intermediate between the abundant CH^+ and yet to be observed but very important CH_3^+ in interstellar chemistry. Its presence is expected in diffuse clouds although the search for interstellar CH_2^+ based on our infrared (2) and near-infrared (3) laboratory spectra has not been successful yet. CH_2^+ and its deuterated species are also of special interest for theoretical studies because of their unique intramolecular dynamics, i.e., the Renner-Teller interaction and quasi-linearity.

EXPERIMENTAL

To produce the desired molecular ions, we used a positive column discharge as shown in Fig. 1. By mixing a 10-Torr He buffer and 0.1-Torr CD_4 reagent gas, and applying a 200-mA AC current, the CD_2^+ ions were produced effectively via Penning ionization in a glass plasma cell. The rotational temperature of the produced ions was on the order of 600 K due to liquid nitrogen cooling of the plasma cell. The spectra of CD_2^+ were recorded in the near-infrared using a Ti:sapphire laser spectrometer, as shown in Fig. 2. A combination of frequency modulation with an EOM at 500 MHz with heterodyne detection and velocity modulation with an AC discharge at 19 kHz with bidirectional optical multi-passing allows us to conduct spectroscopy with near shot-noise-limited sensitivity. By comparing the spectrum of deuterated methane with that of normal methane under the same plasma conditions, one can discriminate the CD_2^+ lines against those of interfering ionic impurities.

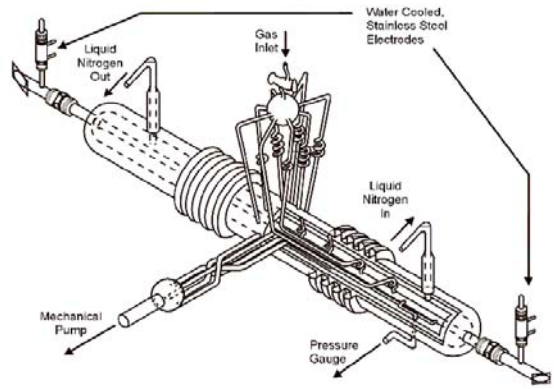

Fig. 1. The positive column discharge cell.

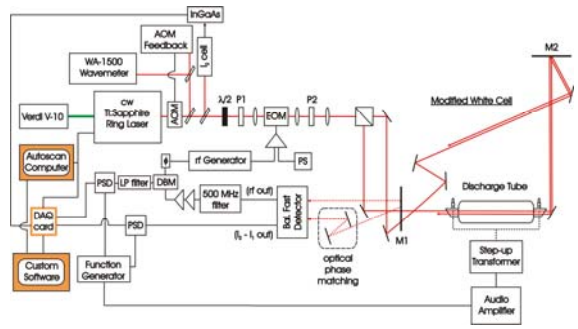

Fig. 2. The near-infrared spectrometer.

RESULTS

The absorption spectrum of CD_2^+ was scanned between 11,000 cm^{-1} and 12,500 cm^{-1}. One isolated vibronic band, $\tilde{A}(0,5,0)^1 \leftarrow \tilde{X}(0,0,0)^0$, and two overlapped bands, $\tilde{A}(0,5,0)^0 \leftarrow \tilde{X}(0,0,0)^1$ and $\tilde{A}(0,4,0)^2 \leftarrow \tilde{X}(0,0,0)^1$, have been identified based on the *ab initio* calculations by Bunker and colleagues (4). Details about the analysis will be published in (5). Based on these assignments, the ground-state rotational constant and the centrifugal distortion constant were calculated via a least-squares fit of the combination differences of the *P* and *R* branches of the corresponding transitions.

ACKNOWLEDGMENTS

This work has been supported by the NSF grant PHY03-54200 and NASA grant 37437.

REFERENCES

1. H. Roberts, E. Herbst, and T. J. Millar, Astrophys. J. 591, L41 (2003).
2. M. Rösslein, C. M. Gabrys, M. -F. Jagod, and T. Oka, J. Mol. Spectrosc. 153, 738 (1992).
3. J. L. Gottfried and T. Oka, J. Chem. Phys. 121, 11527 (2004).
4. P. R. Bunker, private communication.
5. H.M. Wang, C. P. Morong, and T. Oka, to be submitted to J. Chem. Phys.