Engineering

FLIGHT TESTING OF HYBRID CROSS PARACHUTES

Eric M. Brighton, Tobias H. Hawthorne, Dr. Jean Potvin* and Mr. Gary E. Peek*
Parks College Parachute Research Group
Parks College of Saint Louis University
3450 Lindell Blvd.
Saint Louis, MO 63103
thewonderwaller@yahoo.com

Abstract

In this study the glide properties of hybrid cruciform parachutes were investigated. The study was motivated by the need by the U.S. Army for low-cost gliding parachutes used in high precision cargo airdrops, where self-guided gliding parachutes would land their payload within 100 meters from the target and under any wind conditions. As shown below, the parachute is a hybrid design between a standard cruciform parachute - such as the decelerators used on race cars - and a standard round parachute used by military personnel. The design takes advantage of the flight stability of the cruciform parachute and the high drag of the round parachute.

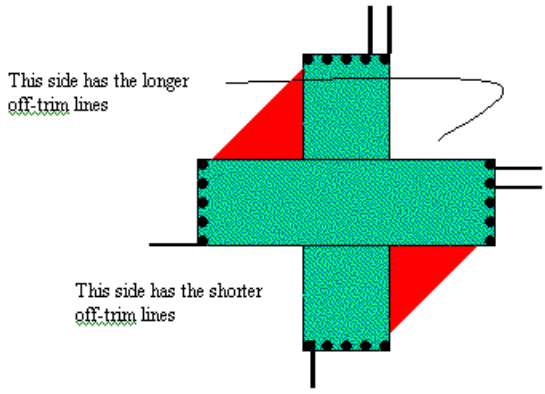

The flight study was based on the measurement, via GPS sensing, of the trajectory of the studied gliding parachute rigged into a built-in spiraling turn, as well as that of a "neutral" parachute freely drifting with the wind. The latter was needed in order to remove trajectory changes due to wind shifts. Multiple flights involving different suspension line arrangements were carried out to identify the configurations that yielded the best glide ratios, optimal turn rates and best flight stability. The instrumentation used included off-the-shelf GPS receivers, data acquisition systems and miscellaneous parachute equipment. Note that the study of the gliding properties of round-type parachutes is a recent development in aerospace engineering, despite the fact that such parachutes have been used as decelerators for many decades.

This presentation will discuss the results obtained from data collected over eight days of drop testing using civilian aircraft at the Vandalia Municipal Airport in Vandalia, IL. This research project was sponsored by the U.S. Army Soldier System Center located in Natick, MA and U.S. Army Yuma Proving Ground in Yuma, AZ.